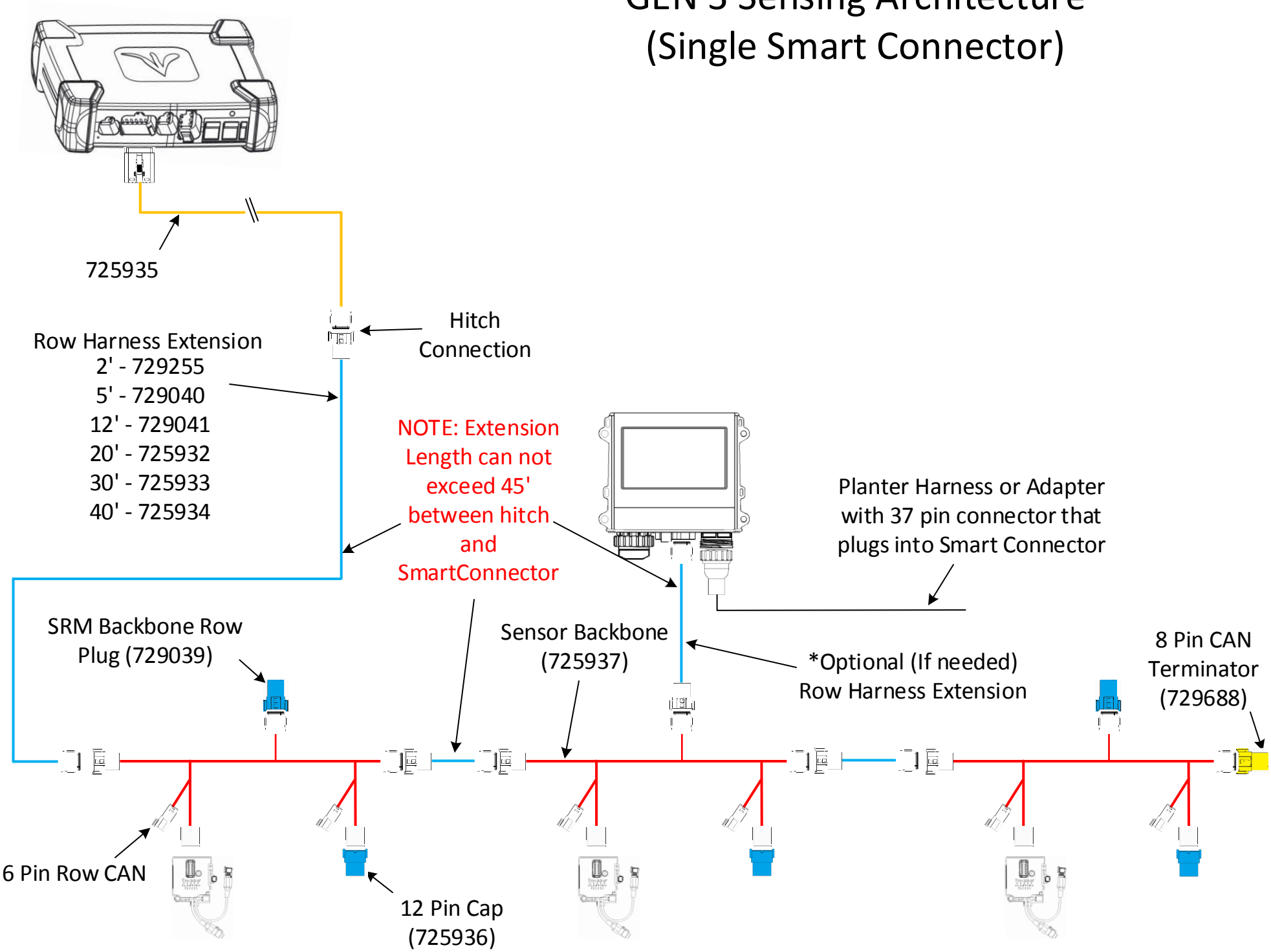GEN 3 Sensing Architecture (Single Smart Connector)